OPERATING MANUAL for OVERNIGHT THAW CABINETS

This manual covers the Installation, Operation and Routine Maintenance requirements for the following Williams Refrigeration products:

Overnight Thaw Cabinets

Provided the instructions in this Operating Manual are read and implemented correctly, the optimum performance and reliability of your equipment should be maintained.

The Williams Overnight Thaw Cabinet has a temperature parameter set as follows:

+0°C (32°F) / +3°C (37°F)

Declaration of Conformity References:
Low Voltage Directive 2006/95/EC
Machinery Directive 2006/42/EC
Electromagnetic Compatibility Directive 2004/108/EC
Pressure Equipment Directive 97/23/EC
Waste Electrical and Electronic Equipment Directive (WEEE) 2002/96/EC
Restriction on Use of Certain Hazardous Substances Directive (RoHS) 2002/95/EC

Refrigerant Designation	Global Warming Potential
HFC - R134a	1300
HFC - R404a	3260

CFC Free Refrigerant

Williams Refrigeration declares that all products manufactured by Williams Refrigeration comply with the above directives as they apply to those products, and those products are therefore declared to be in conformity with the provisions of the above legislation.

Model No.: .....

Serial No.: .....

INSTALLATION

Removal of Redundant Cabinets

Please ensure the old / redundant cabinet and refrigeration equipment are disposed of safely and legally. It is recommended that doors are removed prior to disposal in order to ensure safety.

Unpacking

Remove all external and interior packing and accessories. Ensure all such material is disposed of safely.

Ventilation

It is essential to ensure that the room in which the unit is to be installed has adequate ventilation. Refrigerators generate a considerable amount of heat and, if operated in a small unventilated room in warm weather, they will quickly cause the room temperature to become excessive. This could cause the motor to overheat and possibly damage the windings. At the very least, such an installation will cause the unit to use an excessive amount of electricity. A single door unit usually generates 1200W of heat and a two door version - 1800W (these figures are approximate).

In addition to ventilation in a room, please ensure that cabinets with top-mounted systems have 500mm clearance between the cabinet top and ceiling for engineer access and ventilation, with 50mm clearance provided around the unit to ensure efficient and effective performance. Do not block vents by stacking boxes on top or in front of the unit as this could affect performance.

Castors

The cabinet should stand level to ensure correct operation of self-closing doors and proper drainage of condensate from the evaporator.
Models fitted with castors and non-adjustable, therefore a level platform / floor should be provided where unit is to be located. Where swivel and brake castors are fitted and when unit has been positioned, please ensure brakes have been activated by pressing metal bar down. Remember to release brakes before trying to move unit.

Mains Connection

The unit comes fitted with a moulded plug for safety and must be earthed. If plug or cable should fail, please contact the spares office on +44 (0) 1553 817017 for a replacement.
If the cabinet has been laid on its back or tipped, DO NOT switch on immediately. Leave in an upright position for at least 1 hour before switching on.

Connection to Main Drains

The Overnight Thaw requires connection to a main drain with a standard 1 $^1/_2$" fitting.

Shelf/Slide Fitting

When positioning the slides present the slide to the racking by holding it in the opposite hand to the side of the cabinet you are installing the slides. Offer the slide at a 45° angle as shown in Figure 1. Once in place let slide drop into position creating a horizontal ledge on which the shelves will sit.

Fig. 1

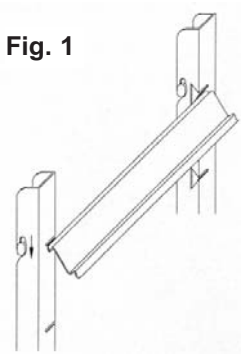

Shelf Weight Distribution

Before loading, allow cabinet to reach normal operating temperature.
When loading the unit, please ensure that load is equally distributed throughout and ensure air can circulate around and through stored products. Ensure all items are covered and that raw and cooked foods are stored separately.

Loading the Cabinet

Food placed inside the unit should be packed in such a way as to encourage thawing. For example, a cardboard box full of frozen hamburgers could take days to thaw out if out into the unit within the cardboard box. However, if the hamburgers are unpacked, loaded onto trays and placed inside the unit they will thaw in a matter of hours. For fastest thawing, food should be uncovered as any type of covering will insulate food.

NB: Since the unit partially untilises the food to lower the temperature, it is recommended that the unit be operated fully loaded whenever possible for amximum efficiency.

THERMOMETER

The controller is marked in Centigrade or Fahrenheit.
The Thermometer should be checked daily to ensure that correct temperature is being maintained.

CONTROL PANEL

GENERAL OPERATION OF THE OVERNIGHT THAW CABINET

The Overnight Thaw Cabinet is designed to control the thawing of frozen food. The principle of the unit is that it is loaded with frozen food the afternoon prior to the day the food is required. The unit must be loaded in such a way as to encourage thawing. Products should be on single trays and removed from their packaging.
The unit has two functions, firstly it is a refrigerator with a temperature range of 0°C to +4°C, secondly it is a heating unit with a temperature range of -1°C to +2°C.
The refrigeration circuit operates immediately the unit is switched on and the temperature will reduce until it is within the safe storage range, 0°C to +4°C. When frozen food is placed inside the unit, the unit temperature will drop to below -1°C which will switch on the heating circuit.
As the temperature reaches +2°C the heating circuit will turn off and the cold food will again reduce the temperature to -1°C causing the cycle described to be repeated.
The refrigeration / heating cycle is repeated until the temperature of the food is incapable of reducing the unit temperature to -1°C.
At this stage no further heat is required from the electric heaters and just the heat from the fan(s) will be sufficient to continue the thawing process. However if at any time the temperature goes up to +4°C, the refrigeration cycle will come back in place and reduce it to +1°C, thereby avoiding any possibility of the food temperature rising to an unsafe level.

PLEASE NOTE: Due to the special operation of the equipment the standby button on the controller is disabled.

Adjusting the Operating Temperature

To adjust the operating temperature press and hold the ⬍ key. Use ▲ and ▼ keys to adjust.

NB: All machines are preset at the factory, however conditions on site will vary compared with test conditions and it may be necessary to perform the above adjustments several times in order to obtain a perfect temperature cycle.

Probe Fail-Safe Feature

The controller features a fail-safe condition. In the event of a temperature probe failure, the compressor will alternate at 5 minute intervals indefinitely between running and not running condition and **E1** or **E2** will be displayed. Normal compressor function will only be restored when the probe fault has been repaired.

Defrost Operation

When defrost is in progress, the defrost indicator on the control panel will become illuminated and **dF** will appear in the LED display.
Defrost is automatic and at preset intervals the unit will go through an automatic defrost cycle. The defrost operation does raise the temperature of the unit slightly for a short period but it does not affect the product stored inside.

FAULT DIAGNOSIS / DISPLAY CONDITIONS

Fault/Display	Possible Cause	Action
Cabinet not Operating	No Power Supply	Check fuse or power source
Cabinet not maintaining temperature	1. Dirty Condenser	Clean
	2. Air circulation restricted	Remove Restriction
	3. Defective Fan Motor	Call engineer
	4. Defective Compressor Relay	Call engineer
	5. Loose electrical connection	Call engineer
Faults displayed by Control	E1 - Probe 1 Air Failure	Call engineer
	E2 - Probe 2 Evaporator Failure	Call engineer

ROUTINE MAINTENANCE

All maintenance should be carried out by a competent, qualified person. We recommend regular preventative maintenance using a qualified service provider in order to get the best from your equipment.

CLEANING

Exterior: If cabinet exterior is looked after correctly it will retain an *"as new"* finish for many years. Normal day to day cleaning should be carried out with a soft cloth and soapy water. For a stainless steel finish, always wipe cabinet in same direction as the grain. Whilst stainless steel is robust, the satin smooth finish can be spoilt by wiping against the grain. Never use abrasive materials or cleaners, or chemical cleaners.
These can damage the surface and cause corrosion. Occasionally, the exterior surface should be polished with a good stainless steel polish to protect it.

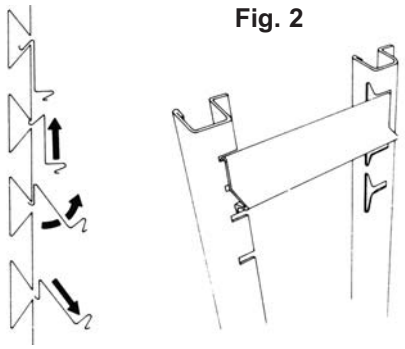

Fig. 2

Interior: Racking can be removed for easy cleaning (see Figure 2). The cabinet interior should be cleaned regularly with warm soapy water and a soft cloth. Dry thoroughly afterwards and where possible remove all racking and shelving to aid the process.

To remove racking and shelf supports, follow this procedure:

First remove shelves, then supports by gripping firmly at the centre and lifting slightly. Turn shelf support towards cabinet interior by pushing at the centre as you twist support through 90°. The shelf support will be released. **(Note: the supports are designed to be anti-tilt and some resistance may be experienced at first. This will be overcome with practice)**. When all shelves have been removed, remove the racking by lifting up and over the nylon retaining blocks.

CONDENSER CLEANING

The condenser is part of the refrigeration unit and is located in the unit compartment. It requires cleaning approximately 4 times per year.
To clean, **disconnect mains supply before starting.** Brush fins vertically with a stiff brush, taking care not to damage them or push dirt/dust further in and vacuum away. **Remember to reconnect mains supply once finished.**

Take care not to damage any electrical connections and cables during removing and the cleaning process. **Replace unit cover and plug cabinet in after completing cleaning process.**

If there are further grease deposits still remaining on the condenser call your Service Provider to carry out a full service.

NOTE: Non-compliance may invalidate your Warranty.

The condensing unit and refrigeration equipment can be accessed from above or in some cases behind. Remove fixings in top and bottom edges of unit cover and pull unit cover away from cabinet and retaining clips.

REPLACING THE GASKET

Door gaskets should be checked and cleaned regularly and replaced if damaged. To clean the gasket, wipe with warm soapy water and a soft cloth, ensuring it is completely dry before closing the door. DO NOT use a sharp knife to clean or scrape the gasket. Damaged gaskets do not seal correctly and can increase the amount of electricity consumed, seriously affecting the efficiency and performance of the cabinet.

Damaged gaskets are easily replaced. Simply pull out existing part and push new gasket into channel (gasket retainer) at centre and work along, pushing gasket into channel. Continue with additional three sides, pushing corners in last.

EVAPORATOR/DRAINLINE

Inspect periodically to ensure the drain hole is not blocked.

BREAKDOWN

In the event of a breakdown, please check thermostat setting and fuse before calling service engineer. When calling, please advise model and serial number.
This information can be found on the identification plate inside unit. It should also be noted on the cover of this booklet. Please ensure that all redundant parts are disposed of safely and legally.

PARTS & LABOUR WARRANTY POLICY - UK ONLY

Our warranty applies to equipment manufactured by Williams Refrigeration and equipment bearing the Williams name plate and serial number identification tag.

We undertake, in conjunction with the supplying agent, distributor or representative, to repair free of charge during our standard business hours any such piece of equipment or part thereof used which is found to be faulty in either materials or workmanship subject to the further conditions below:-

Warranty Terms and products Covered
We offer a **24 months Warranty** from our original date of sale with the following Williams equiment:
1. Garnet / Sapphire / Zircon / Jade / Amber (stainless) / Mobile Heated / Mobile Refrigerated.
2. Reach-in Blast Chillers / Reach-in Blast Chiller Freezers.
3. Opal / Emerald / Onyx / Aztra / Salad Counters.
4. Crystal Bakery Cabinets and Counters.

We offer a **12 months Warranty** from our original date of sale for all other Williams equipment including:
1. All Modular Products (including coldrooms).
2. Remote Systems (including glycol).
3. Bottle Coolers.
4. Multidecks and merchandiser cases.
5. GEM product range.
6. Bottle Well / Meat Freezer Well.
7. Thermowell.
8. Coral Wall Mounted Units.
9. Non standard and other products.
10. Front of House display cases.
11. White Goods.

Warranty Terms
Our warranty is offered where the equipment has been installed correctly and has not been subject to misuse or abuse and is functioning correctly.

The equipment was purchased by the authorised supplying distributor direct from Williams Refrigeration and not through a wholesaler or other supplier whose warranty terms may be different.

The Warranty Policy shall be non-transferable.

Replacement of defective equipment can only be made with the approval of Williams Refrigeration.

Any repair under warranty will only be carried out with the product in its position of operation or in a suitable location on the customer's premises. If the product has to be removed for security or any other reason, this will be subject to additional charge (may include hydrocarbon charged equipment).

Warranty work will be covered by Williams Refrigeration or by one of its appointed service agents between the hours of 8.00am and 5.00pm Monday to Friday.
Any works undertaken outside of these hours are chargeable.

Claims Procedure
If a customer wishes to make a claim under the terms of this warranty, the following procedure should be observed:
1. Contact the supplying agent, representative or distributor.
2. Quote the equipment model, serial number and date of installation.
   The serial number is located on the product identification plate inside the cabinet, modular product door frame or similar location. It is recommended that operators should also record the serial number on the operating instruction booklet supplied with the product.
3. Contents risk and insurance responsibility remains at all times with the customer.

Exceptions to Standard Warranties
1. The Standard warranty applies to equipment located in Mainland GB only and excludes locations subject to restricted or secure access,offshore and marine applications. Additional time and travel charges may be applied to the following locations – Isle of Wight, Channel Islands, Isle of Man, Northern Ireland and Scottish Isles.
2. Any fault that is not reported within 10 working days of being discovered.
3. Service calls to equipment under warranty, or service calls made under chargeable arrangements will be carried out in accordance with standard conditions of sale. Unless otherwise specified, a maximum of 15 minutes of administrative time, not spent directly carrying out servicing work, is provided for within the supply.
   Any requirement for staff attending the call to spend greater time than 15 minutes due to administrative requirements, such as on waiting time or security clearance, or health and safety risk assessments, will be chargeable at our prevailing rate. We reserve the right to apply Time Travel & Call out charges if no fault is found with the product or access is either restricted or denied to our attending engineer.
4. No claim shall exceed the original selling price.
5. Claims for Food and / or contents stored in the equipment supplied (including pharmaceutical or other items) and any consequential loss how so ever arising are excluded under our warranty terms.
6. Components including gaskets, doors, drawers, handles, shelves, tray slides, all internal fixings, plug and lead, connectors, the outer shell, castors / legs, food probes, refrigerant and blockages as well as consumable items such as (but not limited to) batteries, fuses, light bulbs, printer cartridges, keys, glass and paper roll.
7. Equipment manufactured to the customers' own design, Williams Refrigeration will not be liable for any defect, non performance or improper operation of the equipment arising from any drawing design or specification supplied by the customer, their representative or agent.
8. Second hand equipment.
9. The customer uses or installs the equipment in such a way that it exceeds its design envelope or operates the equipment at control parameters other than those provided as standard factory settings.
10. The customer fails to observe commonly accepted operating practices.
11. The customer has not properly cleaned or maintained the equipment or carried out necessary servicing, including cleaning of the condenser, in accordance with instructions, literature or directions issued by Williams Refrigeration. (Operating Instructions are supplied with all equipment but also available at www.williams-refrigeration.co.uk).
12. Equipment fails through improper installation by others, misuse, abuse, accidental damage, power loss or fluctuations, fire, flooding or acts of god.
13. Any third party item(s) connected to the equipment that may affect performance.
14. The customer permits persons other than those authorised by Williams Refrigeration to perform or affect repairs or adjustments to the equipment.
15. If authorised representatives of Williams Refrigeration are denied full and free rights of access to the equipment for inspection during normal business hours as previously stated.
16. If Repairs are made using spare parts or replacement items not supplied or preauthorised by Williams Refrigeration.
17. The initial equipment supply date shall apply for warranty validity for the subsequent supply of replacement of parts or products.

Extended Warranty
Extended Warranty offers the opportunity to protect your equipment (subject to conditions outlined) for an additional period of up to 5 years inclusive of original warranty periods.

Should you require Extended Warranty, state on your order or notify the Dealer or Williams Sales Manager at the time of purchase and they will be able to arrange it for you.

To ensure your Extended Warranty Policy remains valid, at least one maintenance / service visit per year must take place in years 2, 3, 4 and 5.

For further information or clarification please call 01553 817000 or email to info@williams-refrigeration.co.uk or write to Williams Refrigeration, Bryggen Road, Kings Lynn, Norfolk, PE30 2HZ

WILLIAMS REFRIGERATION
Bryggen Road,
North Lynn Industrial Estate
King's Lynn, Norfolk PE30 2HZ
Sales Tel: +44 1553 817000 Fax: +44 1553 817111
Spares Tel: +44 1553 817017 Fax: +44 1553 817020
Email: info@williams-refrigeration.co.uk
Website: **www.williams-refrigeration.co.uk**

WILLIAMS SILVER FROST
2 rue Conventionnel Huguet
23000 GUERET
France
Tel: +33 5 55 52 27 88 Fax: +33 5 55 62 10 61
Email: cmalabre@williams-silverfrost.com
Website: **www.williams-silverfrost.com**

WILLIAMS REFRIGERATION AUSTRALIA
38-42 Gaine Road
Dandenong South, Victoria 3175
Australia
Tel: +61 3 8787 4747 Fax: +61 3 8787 4787
Email: sales@williamsref.com.au
Website: **www.williamsref.com.au**

WILLIAMS HONG KONG
4A Harrington Building,
36-50 Wang Wo Tsai Street, Tsuen Wan,
North Territories, Hong Kong
Tel: +852 2407 5422 Fax: +852 2407 3767
Email: mfco@williams-hongkong.com
Website: **www.williams-hongkong.com**